OPTICAL CONNECTION			
FROM P1	FIBER #	TO P2	FIBER #
Rx-1	1	Tx-1	12
Rx-2	2	Tx-2	11
Rx-3	3	Tx-3	10
Rx-4	4	Tx-4	9
dummy	5	dummy	8
dummy	6	dummy	7
dummy	7	dummy	6
dummy	8	dummy	5
Tx-4	9	Rx-4	4
Tx-3	10	Rx-3	3
Tx-2	11	Rx-2	2
Tx-1	12	Rx-1	1

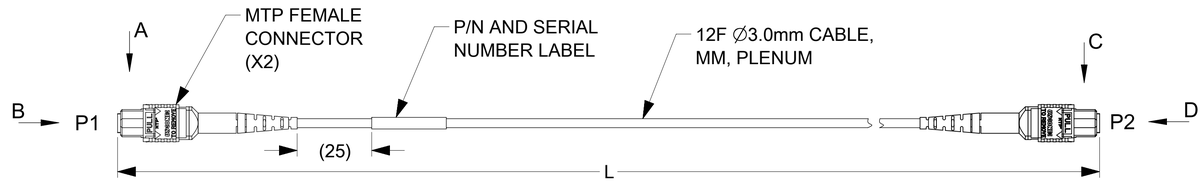

SINGLE JACKET ASSEMBLY

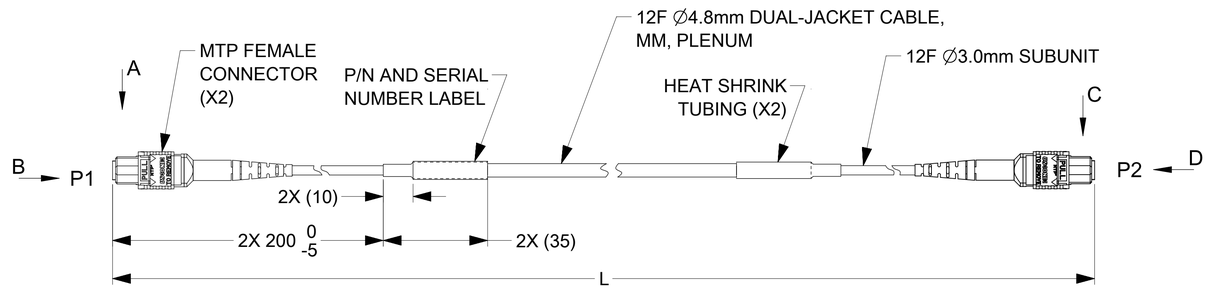

DUAL JACKET ASSEMBLY

VIEW A

VIEW C

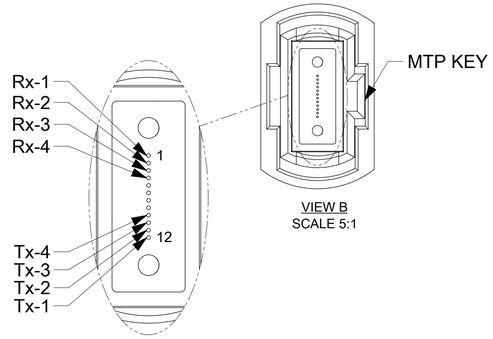

VIEW B
SCALE 5:1

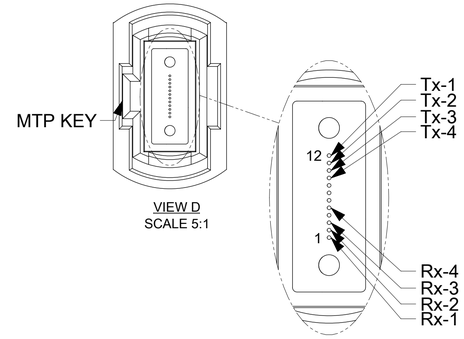

VIEW D
SCALE 5:1

NOTE:

CABLE ASSEMBLY SPECIFICATIONS:

OPTICAL PROPERTIES	
FIBER TYPE	MULTIMODE 50/125 µm BEND-INSENSITIVE
CONNECTOR INSERTION LOSS MTP/LC (MAX.)	0.5/0.35 dB
CABLE ATTENUATION (MAX.)	3.5/1.2 dB/km AT 850/1300 nm
OVERFILLED LAUNCH BANDWIDTH, MIN.	SEE TABLE 1
ENVIRONMENTAL PROPERTIES	
CONNECTOR MATERIALS	UL94 V-0
CABLE FLAMMABILITY RATING	PLENUM OFNP (NFPA262/UL 910)
OPERATING TEMPERATURE RANGE	-0°C TO +70°C
MECHANICAL PROPERTIES	
FIBER COUNT	4 Tx X 4 Rx
CABLE MIN. BEND RADIUS	
SHORT TERM	45mm - SINGLE JACKET 72mm - DUAL JACKET
LONG TERM	20mm - SINGLE JACKET 48mm - DUAL JACKET
NO LOAD	10mm - SINGLE JACKET OR SUBUNIT OF DUAL JACKET
CABLE COMPRESSION FORCE	>3.5 N/mm

TABLE 1

FIBER TYPE	OVERFILLED LAUNCH BANDWIDTH, MIN. (MHz-km)		10 GIGABIT ETHERNET LINK DISTANCE, MIN. (m)		EFFECTIVE MODAL BANDWIDTH (MHz-km)
	850 nm	1300 nm	850 nm	1300 nm	850 nm
STANDARD BANDWIDTH (OM2)	500	500	86	---	---
HIGH BANDWIDTH (OM3)	1500	500	300	---	2000
HIGH BANDWIDTH (OM4)	3500	550	550	---	4700

THIS DRAWING CONTAINS INFORMATION THAT IS PROPRIETARY TO MOLEX ELECTRONIC TECHNOLOGIES, LLC AND SHOULD NOT BE USED WITHOUT WRITTEN PERMISSION

DIMENSION UNITS	SCALE
mm	1:1

GENERAL TOLERANCES (UNLESS SPECIFIED)

ANGULAR TOL	±	0.5 °
4 PLACES	±	
3 PLACES	±	
2 PLACES	±	
1 PLACE	±	
0 PLACES	±	

DRAFT WHERE APPLICABLE MUST REMAIN WITHIN DIMENSIONS

CURRENT REV DESC:

EC NO: 743399
DRWN: IGUMIN 2023/03/22
CHK'D: TTYBOR 2023/03/24
APPR: TTYBOR 2023/03/24

INITIAL REVISION:
DRWN: IGUMIN 2007/02/13
APPR: IGUMIN 2007/02/13

molex

MOLEX QSFP OPTICAL CABLE ASSEMBLY

PRODUCT CUSTOMER DRAWING

DOCUMENT NUMBER	DOC TYPE	DOC PART	REVISION
SD-106283-00XX	PSD	001	E12

THIRD ANGLE PROJECTION	DRAWING	SERIES	MATERIAL NUMBER	CUSTOMER	SHEET NUMBER
	D-SIZE	106283	SEE TABLE	GENERAL MARKET	1 OF 2

DOCUMENT STATUS	P1	RELEASE DATE	2023/03/24	21:15:18

STANDARD BANDWIDTH (OM2 FIBER)			HIGH BANDWIDTH (OM3 FIBER)			HIGH BANDWIDTH (OM4 FIBER)			OVERALL LENGTH L (m)
ASSY P/N	CABLE JACKET COLOR	CONN. BODY COLOR	ASSY P/N	CABLE JACKET COLOR	CONN. BODY COLOR	ASSY P/N	CABLE JACKET COLOR	CONN. BODY COLOR	
TBD	ORANGE (SINGLE JACKET)	BLACK	1062831000	AQUA (SINGLE JACKET)	AQUA	1062837501	AQUA (SINGLE JACKET)	AQUA	0.5 +0.1/-0
1062830001			1062831001			1062837001			1.0 +0.2/-0
1062830115			1062831115			1062837502			1.5+0.2/-0
1062830002			1062831002			1062837002			2.0 +0.2/-0
1062830125			1062831125			1062837503			2.5+0.2/-0
1062830003			1062831003			1062837003			3.0 +0.2/-0
TBA			1062831103			TBA			3.5 +0.2/-0
1062830004			1062831004			1062837004			4.0 +0.2/-0
1062830005			1062831005			1062837005			5.0 +0.2/-0
1062830006			1062831006			1062837006			6.0 +0.2/-0
1062830007			1062831007			1062837007			7.0 +0.2/-0
1062830008			1062831008			1062837008			8.0 +0.2/-0
1062830009			1062831009			1062837009			9.0 +0.2/-0
1062830010			1062831010			1062837010			10.0 +0.3/-0
1062830011			1062831011			1062837011			11.0 +0.3/-0
1062830012			1062831012			1062837012			12.0 +0.3/-0
1062830013			1062831013			1062837013			13.0 +0.3/-0
1062830014			1062831014			1062837014			14.0 +0.3/-0
1062830015			1062831015			1062837015			15.0 +0.3/-0
1062830016			1062831016			1062837016			16.0 +0.3/-0
1062830017			1062831017			1062837017			17.0 +0.3/-0
1062830018			1062831018			1062837018			18.0 +0.3/-0
1062830019			1062831019			1062837019			19.0 +0.3/-0
1062830020			1062831020			1062837020			20.0 +0.4/-0
1062830021			1062831021			1062837021			21.0 +0.4/-0
1062830022			1062831022			1062837022			22.0 +0.4/-0
1062830023			1062831023			1062837023			23.0 +0.4/-0
1062830024			1062831024			1062837024			24.0 +0.4/-0
1062830025			1062831025			1062837025			25.0 +0.5/-0
1062830026			1062831026			1062837026			26.0 +0.5/-0
1062830027			1062831027			1062837027			27.0 +0.5/-0
1062830028			1062831028			1062837028			28.0 +0.5/-0
1062830029			1062831029			1062837029			29.0 +0.5/-0
1062830030	ORANGE (DUAL JACKET)		1062831030	AQUA (DUAL JACKET)		1062837030	AQUA (DUAL JACKET)		30.0 +0.6/-0
1062830035			1062831035			1062837035			35.0 +0.7/-0
1062830040			1062831040			1062837040			40.0 +0.8/-0
1062830045			1062831045			1062837045			45.0 +0.9/-0
1062830050			1062831050			1062837050			50.0 +1.0/-0
			1062831055			1062837055			55.0 +1.1/-0
			1062831060			1062837060			60.0 +1.2/-0
			1062831065			1062837065			65.0 +1.3/-0
			1062831070			1062837070			70.0 +1.4/-0
			1062831075			1062837075			75.0 +1.5/-0
			1062831080			1062837080			80.0 +1.6/-0
			1062831085			1062837085			85.0 +1.7/-0
			1062831090			1062837090			90.0 +1.8/-0
			1062831095			1062837095			95.0 +1.9/-0
			1062831100			1062837100			100.0 +2.0/-0
			1062831120			TBA			120.0 +2.4/-0
			1062831150			1062837150			150.0 +3.0/-0
			1062831300			TBA			300.0 +6.0/-0
			TBA			1062837400			400.0 +8.0/-0

THIS DRAWING CONTAINS INFORMATION THAT IS PROPRIETARY TO MOLEX ELECTRONIC TECHNOLOGIES, LLC AND SHOULD NOT BE USED WITHOUT WRITTEN PERMISSION

DIMENSION UNITS	SCALE
mm	1:1

GENERAL TOLERANCES (UNLESS SPECIFIED)

ANGULAR TOL	±	0.5 °
4 PLACES	±	
3 PLACES	±	
2 PLACES	±	
1 PLACE	±	
0 PLACES	±	

DRAFT WHERE APPLICABLE MUST REMAIN WITHIN DIMENSIONS

CURRENT REV DESC:

EC NO: 743399
DRWN: IGUMIN 2023/03/22
CHK'D: TTYBOR 2023/03/24
APPR: TTYBOR 2023/03/24

INITIAL REVISION:
DRWN: IGUMIN 2007/02/13
APPR: IGUMIN 2007/02/13

molex

MOLEX QSFP OPTICAL CABLE ASSEMBLY

PRODUCT CUSTOMER DRAWING

DOCUMENT NUMBER	DOC TYPE	DOC PART	REVISION
SD-106283-00XX	PSD	001	E12

THIRD ANGLE PROJECTION	DRAWING	SERIES	MATERIAL NUMBER	CUSTOMER	SHEET NUMBER
	D-SIZE	106283	SEE TABLE	GENERAL MARKET	2 OF 2

DOCUMENT STATUS	P1	RELEASE DATE	2023/03/24 21:15:18